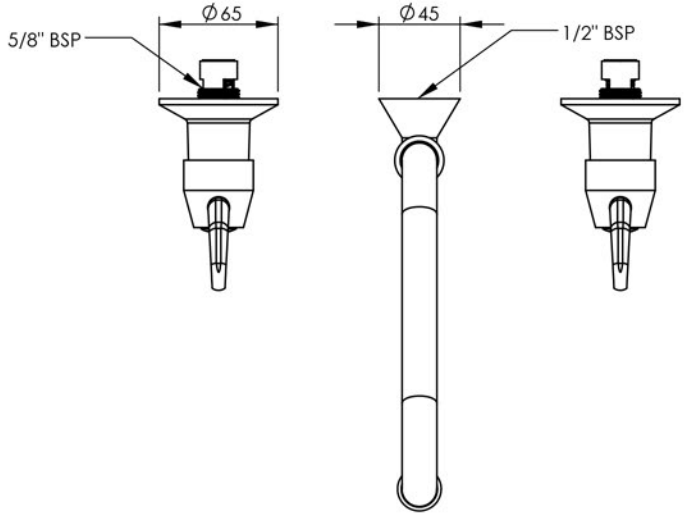

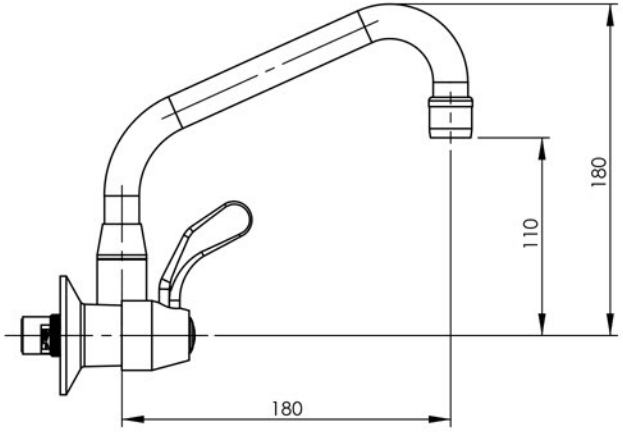

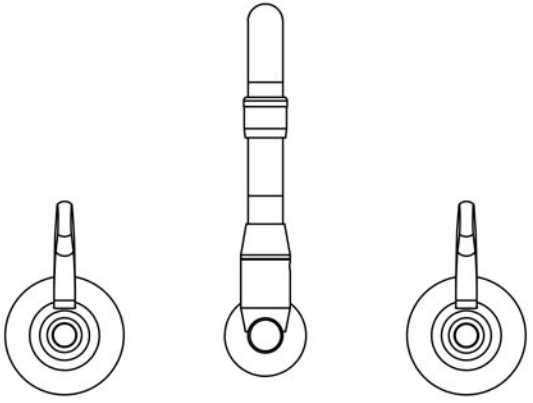

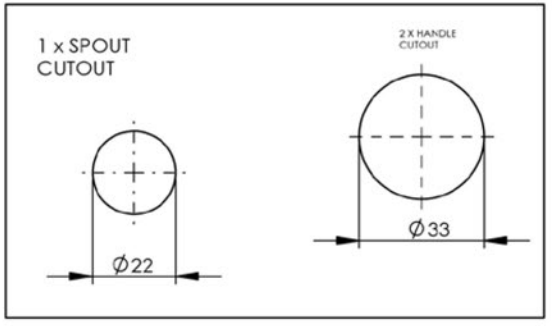

yellow tapware

YX315

FSM (FOOD SERVICE MACHINERY PTY. LTD.)
HEAD OFFICE: UNIT E6, 63-85 TURNER STREET,
PORT MELBOURNE, VIC. 3207 AUSTRALIA
T: +61 3 8645 2555 F: +61 3 8645 2565
E: sales@fsm-pl.com.au W: www.fsm-pl.com.au

SYDNEY OFFICE:
UNIT 15, 7-9 PROGRESS CIRCUIT,
PRESTONS, NSW 2170 AUSTRALIA
T: +61 2 9608 8620 F: +61 2 9607 9370
E: sales@fsm-pl.com.au W: www.fsm-pl.com.au

QUEENSLAND:
T: 0400 099 992
E: sales @fsm-pl.com.au
W: www.fsm-pl.com.au